B-MAX2 MR SETTING SHEET Ver.01

DRIVER Sylvain Gallo-Selva | DATE 12 / 05 / 13

CIRCUIT ORANGE (FRANCE)

○ INDOOR ⊙ OUTDOOR
○ WET ○ DRY ⊙ DUSTY ○ OTHER
⊙ LOW TRACTION ○ MED TRACTION ○ HIGH TRACTION
○ SMOOTH ⊙ BUMPY ○ BIUE GROOVE ○ ASTROTURF

FRONT

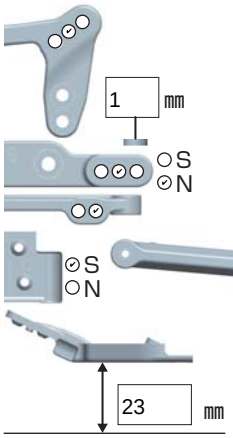

◆CAMBER ⊙←→○ 1.5 °

◆TOE ○IN ⊙OUT 1 °

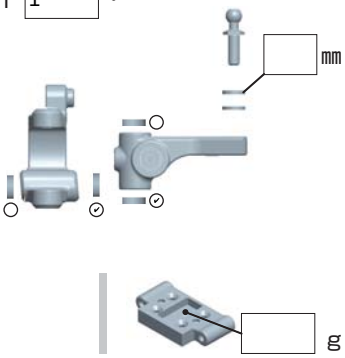

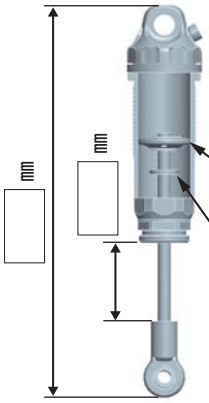

SPRING
○ BLUE
⊙ YELLOW

OIL
27.5 Associated
○ #1 ○ #2 ○ #3
⊙ White 6 holes
○ ○

mm x

REAR

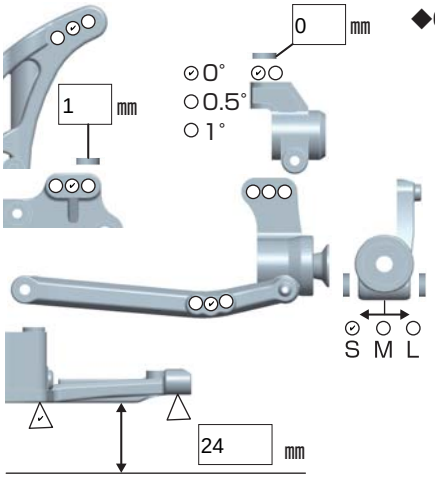

◆CAMBER ⊙←→○ 1.5 °

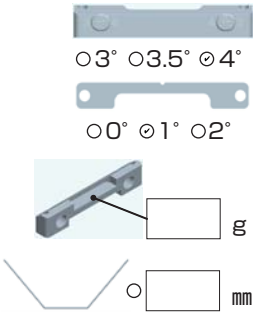

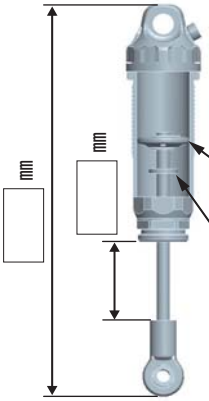

SPRING
○ BLUE
⊙ YELLOW

OIL
25 Associated
○ #1 ○ #2 ○ #3
⊙ White 6 holes
○ ○

mm x

DRIVE

_____

○Bonded
○Sintered mm

MOTOR ➪ YOKOMO R Series 8.5T
GEAR ➪ Spur 80 T / Pinion 23 T : 2.6
BATTERY ➪ YOKOMO MAX POWER 4200
ESC ○ NOSRAM / / /
⊙BL-R3 ○

Battery placement

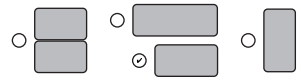

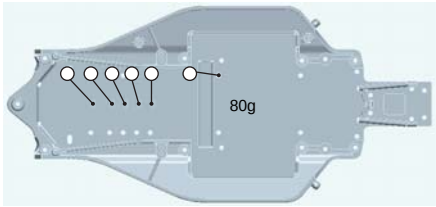

TIRE

FRONT

TIRE ➪ RIB
INSERTS ➪ PROLINE
WHEELS ➪ STD

REAR

TIRE ➪ SWEEP SQUARE ARMOR
INSERTS ➪ PROLINE
WHEELS ➪ STD

OTHER

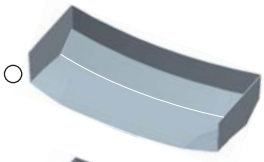

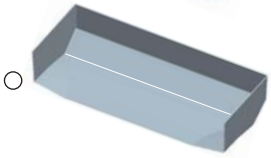

○ FULL RIP

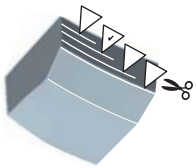

⊙ JC

COMMENT

80g under battery
total weight 1610g